[FPGA Tutorial] Seven-Segment LED Display on Basys 3 FPGA

This FPGA tutorial will guide you how to control the 4-digit seven-segment display on Basys 3 FPGA Board. A display controller will be designed in Verilog for displaying numbers on the 4-digit 7-segment LED display of the Basys 3 FPGA. Full Verilog code for the seven-segment LED display controller will also be provided.

The Basys 3 FPGA has a common-anode 4-digit 7-segment LED display as shown in the following figure.

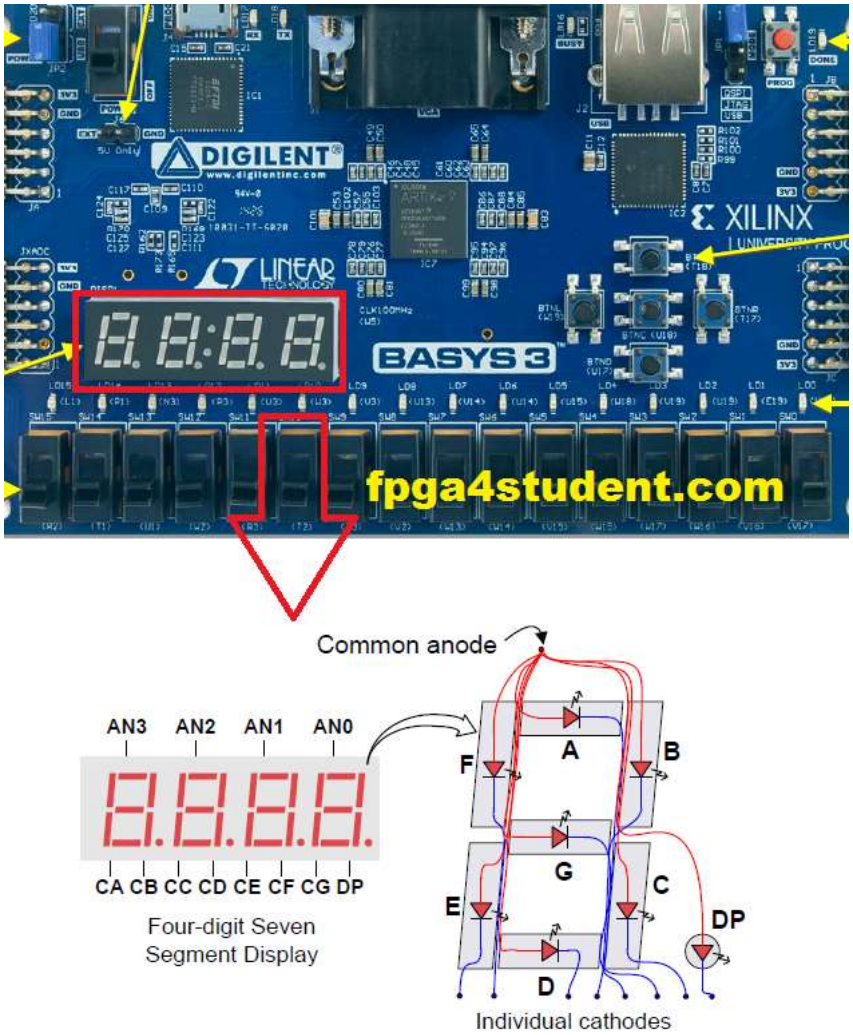

Seven anodes of the seven segments in a single LED are connected together to one common anode node while its cathodes are separate as shown in the following figure. DP-segment is to illuminate the dot so we omit the DP-segment for now since it is not contributing to the number value of the seven-segment display.

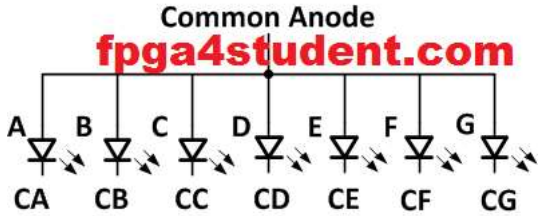

To illuminate LED segments such as A-G, anodes of these segments need to be at the '*high*' logic level and cathodes should be at the '*low*' logic level. Thus, the common anode node should be high to activate a single seven-segment LED display. The logic levels of cathodes can be varying from low (illuminated) to high(un-illuminated) to show different decimal values on a single 7-segment LED display as follows.

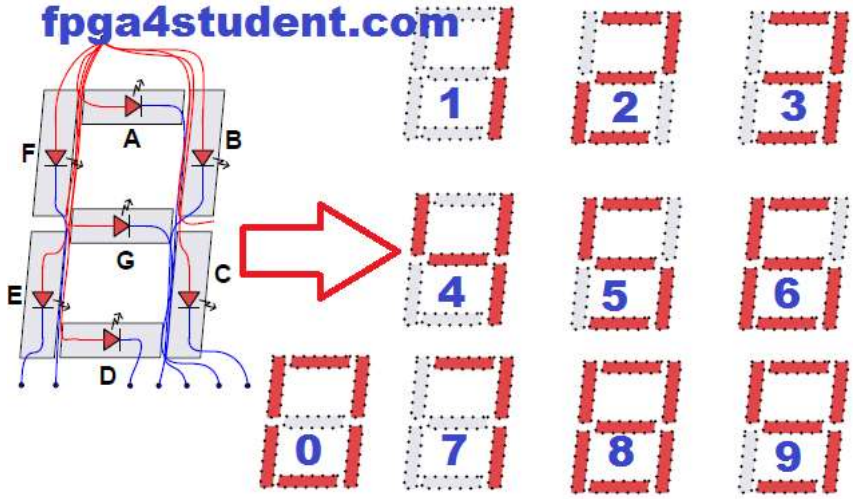

As shown in the figure above, we can display the numbers from zero to nine on the seven-segment LED display by turning on and off the seven segments of the single seven-segment LED display. For example, to show number "*1*" on the LED, the segments A, F, G, E, and D are un-illuminated or their cathodes should be high, and B-C segments are illuminated or their cathodes should be low. Similarly, we can obtain the following decoder table for displaying ten numbers on seven-segment LED display:

Number	Common-Anode	CA	CB	CC	CD	CE	CF	CG	Cathode[6:0]
0	high	low	low	low	low	low	low	high	7'b0000001
1	high	high	low	low	high	high	high	high	7'b1001111
2	high	low	low	high	low	low	high	low	7'b0010010
3	high	low	low	low	low	high	high	low	7'b0000110
4	high	high	low	low	high	high	low	low	7'b1001100
5	high	low	high	low	low	high	low	low	7'b0100100
6	high	low	high	low	low	low	low	low	7'b0100000
7	high	low	low	low	high	high	high	high	7'b0001111
8	high	low	low	low	low	low	low	low	7'b0000000
9	high	low	low	low	low	high	low	low	7'b0000100

fpga4student.com

The table shows the needed cathode patterns for showing corresponding numbers on a single 7-segment LED display of the Basys 3 FPGA board.

For now, we know how to display numbers on a single seven-segment LED display on Basys 3 FPGA board. However, the cathodes of four seven-segment LEDs on Basys 3 are not separate but connected together as shown in the following figure.

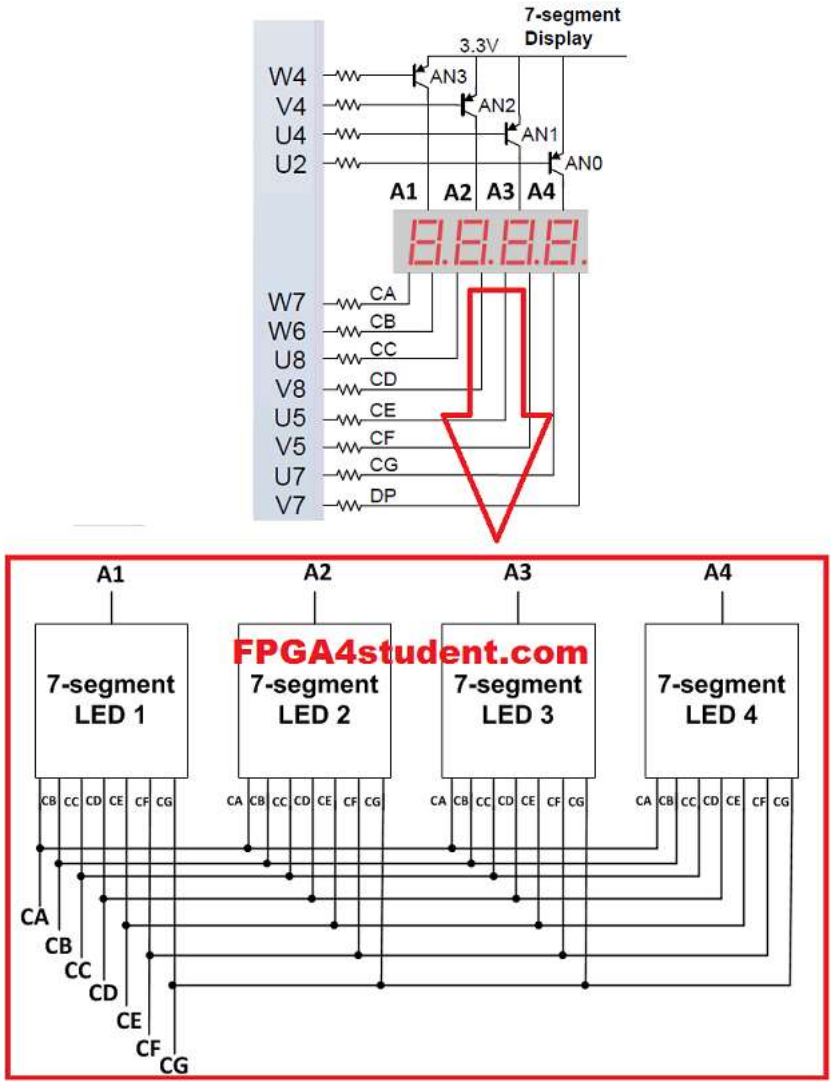

Thus, to display 4 different numbers on the 4-digit seven-segment LED display, we have to control the cathodes (CA-CG) of the four seven-segment LEDs separately by activating the four seven-segment LEDs at different times. For example, when we activate LED 1 by driving A1 high and the other three LEDs (LED 2, LED 3, LED 4) are deactivated (A2, A3, and A4 not driven), the cathode pattern (CA-CG) will be used for displaying numbers on LED 1. Similarly, LED 2 - LED 4 can be displayed by using the same way at different times. As shown in the figure above, we can control activating four seven-segment LEDs by using 4 PNP transistors AN0-AN3. When a transistor is on or the Base terminal (W4, U4, V4, or U2) is low, the corresponding anode is driven high to activate or enable the corresponding seven-segment LED.
When a LED is deactivated after illuminating, it will darken. To avoid the displaying discontinuity perceived by the human eye, the four seven-segment LEDs should be continuously refreshed at about 1KHz to 60Hz or it should be refreshed at every 1ms to 16ms.

In this FPGA tutorial, a seven-segment LED display controller is designed for displaying numbers on the four-digit 7-segment LED display of the Basys 3 FPGA board. The following is the timing diagram for the seven-segment LED display controller on Basys 3 FPGA:

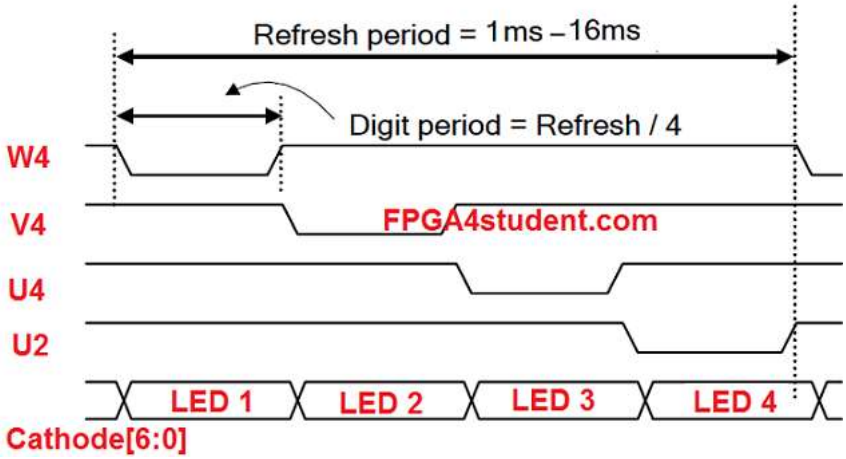

Below is an example timing diagram for displaying "1234" on the 4-digit 7-segment LED display of Basys 3 FPGA board with the refresh rate of 60Hz or period of 16ms:

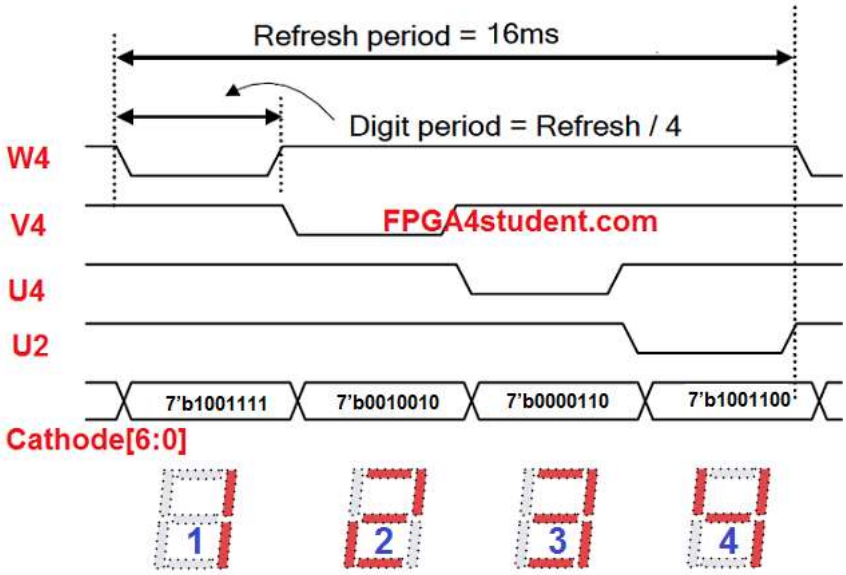

Now, we know how to control and display numbers on the four-digit seven-segment LED display on Basys 3 FPGA. Next, let's design the 7-segment LED display controller.

The Basys 3 FPGA has a clock source of 100MHz and we need a 1ms-16ms refresh period or a 1KHz-60Hz refresh rate. I will choose a refresh period of 10.5ms (digit period = 2.6ms) so that we can use a 20-bit counter for creating the refresh period with the first 2 MSB bits of the counter for creating LED-activating signals (digit period of 2.6ms) as shown in the timing diagram above.

Below is an example Verilog code for creating the refresh signal and LED-activating signals:

```
reg [19:0] refresh_counter;
// the first 18-bit for creating 2.6ms digit period
// the other 2-bit for creating 4 LED-activating signals
wire [1:0] LED_activating_counter;
// count        0    ->  1  ->  2  ->  3
// activates    LED1    LED2   LED3   LED4
// and repeat
always @(posedge clock_100Mhz or posedge reset)
begin
 if(reset==1)
  refresh_counter <= 0;
 else
  refresh_counter <= refresh_counter + 1;
end
assign LED_activating_counter = refresh_counter[19:18];
```

After that, we need to generate the anode signals (W4, V4, U4, U2) for the four-digit 7-segment LED display based on the LED-activating counter. The LED-activating counter will repeatedly count from zero to

three for continuously activating and updating the four seven-segment LEDs.

Below is an example Verilog code for creating the anode signals and updating values of the four 7-segment LEDs on Basys 3 FPGA:

```
    // anode activating signals for 4 LEDs
    // decoder to generate anode signals
    always @(*)
    begin
        case(LED_activating_counter)
        2'b00: begin
            Anode_Activate = 4'b0111;
            // activate LED1 and Deactivate LED2, LED3, LED4
            LED_BCD = displayed_number[15:11];
            // the first hex-digit of the 16-bit number
             end
        2'b01: begin
            Anode_Activate = 4'b1011;
            // activate LED2 and Deactivate LED1, LED3, LED4
            LED_BCD = displayed_number[10:8];
            // the second hex-digit of the 16-bit number
                end
        2'b10: begin
            Anode_Activate = 4'b1101;
            // activate LED3 and Deactivate LED2, LED1, LED4
            LED_BCD = displayed_number[7:4];
             // the third hex-digit of the 16-bit number
              end
        2'b11: begin
            Anode_Activate = 4'b1110;
            // activate LED4 and Deactivate LED2, LED3, LED1
             LED_BCD = displayed_number[3:0];
             // the fourth hex-digit of the 16-bit number
               end
        default:begin
             Anode_Activate = 4'b0111;
            // activate LED1 and Deactivate LED2, LED3, LED4
            LED_BCD = displayed_number[15:11];
            // the first hex-digit of the 16-bit number
            end
        endcase
    end
```

Last but not least, the example Verilog code for BCD to 7-segment decoder based on the decoder table above:

```
reg[6:0] LED_out;
// Cathode patterns of the 7-segment LED display
always @(*)
begin
 case(LED_BCD)
 4'b0000: LED_out = 7'b0000001; // "0"
 4'b0001: LED_out = 7'b1001111; // "1"
 4'b0010: LED_out = 7'b0010010; // "2"
 4'b0011: LED_out = 7'b0000110; // "3"
 4'b0100: LED_out = 7'b1001100; // "4"
 4'b0101: LED_out = 7'b0100100; // "5"
 4'b0110: LED_out = 7'b0100000; // "6"
 4'b0111: LED_out = 7'b0001111; // "7"
 4'b1000: LED_out = 7'b0000000; // "8"
 4'b1001: LED_out = 7'b0000100; // "9"
 default: LED_out = 7'b0000001; // "0"
 endcase
end
```

The design for 7-segment LED display controller is basically completed. Let's use the controller to display a 16-bit counting number on the four-digit seven-segment LED display of the Basys 3 FPGA board with the counting period of 1 second.

Full Verilog code of the seven-segment LED display controller for displaying counting numbers on Basys 3 FPGA:

```
// fpga4student.com: FPGA projects, Verilog projects, VHDL projects
// FPGA tutorial: seven-segment LED display controller on Basys  3 FPGA
module Seven_segment_LED_Display_Controller(
    input clock_100Mhz, // 100 Mhz clock source on Basys 3 FPGA
    input reset, // reset
    output reg [3:0] Anode_Activate, // anode signals of the 7-segment LED display
    output reg [6:0] LED_out// cathode patterns of the 7-segment LED display
    );
    reg [26:0] one_second_counter; // counter for generating 1 second clock enable
    wire one_second_enable;// one second enable for counting numbers
    reg [15:0] displayed_number; // counting number to be displayed
    reg [3:0] LED_BCD;
    reg [19:0] refresh_counter; // 20-bit for creating 10.5ms refresh period or 38
             // the first 2 MSB bits for creating 4 LED-activating signals with 2.
    wire [1:0] LED_activating_counter;
                 // count     0    ->  1  ->  2  ->  3
              // activates    LED1    LED2   LED3   LED4
             // and repeat
    always @(posedge clock_100Mhz or posedge reset)
    begin
        if(reset==1)
            one_second_counter <= 0;
        else begin
            if(one_second_counter>=99999999)
                 one_second_counter <= 0;
            else
                one_second_counter <= one_second_counter + 1;
        end
    end
    assign one_second_enable = (one_second_counter==99999999)?1:0;
    always @(posedge clock_100Mhz or posedge reset)
    begin
        if(reset==1)
            displayed_number <= 0;
        else if(one_second_enable==1)
            displayed_number <= displayed_number + 1;
    end
    always @(posedge clock_100Mhz or posedge reset)
    begin
        if(reset==1)
            refresh_counter <= 0;
        else
            refresh_counter <= refresh_counter + 1;
    end
    assign LED_activating_counter = refresh_counter[19:18];
    // anode activating signals for 4 LEDs, digit period of 2.6ms
    // decoder to generate anode signals
    always @(*)
    begin
        case(LED_activating_counter)
        2'b00: begin
            Anode_Activate = 4'b0111;
            // activate LED1 and Deactivate LED2, LED3, LED4
            LED_BCD = displayed_number/1000;
            // the first digit of the 16-bit number
              end
        2'b01: begin
```

```
            Anode_Activate = 4'b1011;
            // activate LED2 and Deactivate LED1, LED3, LED4
            LED_BCD = (displayed_number % 1000)/100;
            // the second digit of the 16-bit number
              end
        2'b10: begin
            Anode_Activate = 4'b1101;
            // activate LED3 and Deactivate LED2, LED1, LED4
            LED_BCD = ((displayed_number % 1000)%100)/10;
            // the third digit of the 16-bit number
                end
        2'b11: begin
            Anode_Activate = 4'b1110;
            // activate LED4 and Deactivate LED2, LED3, LED1
            LED_BCD = ((displayed_number % 1000)%100)%10;
            // the fourth digit of the 16-bit number
               end
        endcase
    end
    // Cathode patterns of the 7-segment LED display
    always @(*)
    begin
        case(LED_BCD)
        4'b0000: LED_out = 7'b0000001; // "0"
        4'b0001: LED_out = 7'b1001111; // "1"
        4'b0010: LED_out = 7'b0010010; // "2"
        4'b0011: LED_out = 7'b0000110; // "3"
        4'b0100: LED_out = 7'b1001100; // "4"
        4'b0101: LED_out = 7'b0100100; // "5"
        4'b0110: LED_out = 7'b0100000; // "6"
        4'b0111: LED_out = 7'b0001111; // "7"
        4'b1000: LED_out = 7'b0000000; // "8"
        4'b1001: LED_out = 7'b0000100; // "9"
        default: LED_out = 7'b0000001; // "0"
        endcase
    end
 endmodule
```

Pin constraint file for the four-digit seven-segment LED display on Basys 3 FPGA:

```
# Clock signal
set_property PACKAGE_PIN W5 [get_ports clock_100Mhz]
 set_property IOSTANDARD LVCMOS33 [get_ports clock_100Mhz]
set_property PACKAGE_PIN R2 [get_ports reset]
 set_property IOSTANDARD LVCMOS33 [get_ports reset]
#seven-segment LED display
set_property PACKAGE_PIN W7 [get_ports {LED_out[6]}]
   set_property IOSTANDARD LVCMOS33 [get_ports {LED_out[6]}]
set_property PACKAGE_PIN W6 [get_ports {LED_out[5]}]
   set_property IOSTANDARD LVCMOS33 [get_ports {LED_out[5]}]
set_property PACKAGE_PIN U8 [get_ports {LED_out[4]}]
   set_property IOSTANDARD LVCMOS33 [get_ports {LED_out[4]}]
set_property PACKAGE_PIN V8 [get_ports {LED_out[3]}]
   set_property IOSTANDARD LVCMOS33 [get_ports {LED_out[3]}]
set_property PACKAGE_PIN U5 [get_ports {LED_out[2]}]
   set_property IOSTANDARD LVCMOS33 [get_ports {LED_out[2]}]
set_property PACKAGE_PIN V5 [get_ports {LED_out[1]}]
   set_property IOSTANDARD LVCMOS33 [get_ports {LED_out[1]}]
set_property PACKAGE_PIN U7 [get_ports {LED_out[0]}]
   set_property IOSTANDARD LVCMOS33 [get_ports {LED_out[0]}]
set_property PACKAGE_PIN U2 [get_ports {Anode_Activate[0]}]
   set_property IOSTANDARD LVCMOS33 [get_ports {Anode_Activate[0]}]
set_property PACKAGE_PIN U4 [get_ports {Anode_Activate[1]}]
   set_property IOSTANDARD LVCMOS33 [get_ports {Anode_Activate[1]}]
```

```
set_property PACKAGE_PIN V4 [get_ports {Anode_Activate[2]}]
   set_property IOSTANDARD LVCMOS33 [get_ports {Anode_Activate[2]}]
set_property PACKAGE_PIN W4 [get_ports {Anode_Activate[3]}]
   set_property IOSTANDARD LVCMOS33 [get_ports {Anode_Activate[3]}]
```

Now, create a new project in Vivado, choose the device part number of XC7A35T-1CPG236C for Artix-7 FPGA on Basys 3 FPGA board. Then, add the source and constraint files, and generate the bitstream. Program the FPGA using the bit stream and see how it works on the Basys 3 FPGA board.

Demo video for seven-segment LED display controller on Basys 3 FPGA board:

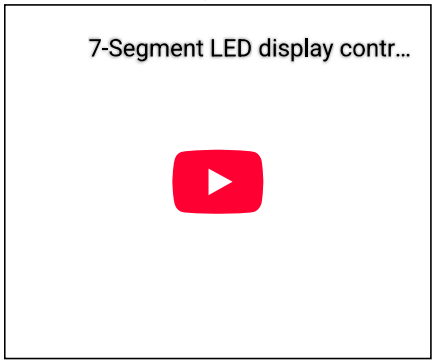

Here is the full VHDL code for seven-segment display on Basys 3 FPGA.

Recommended FPGA projects for students:

1. **What is FPGA? How does FPGA work?**
2. **What is FPGA Programming?**
3. **How to load text file or image into FPGA**
4. **Image processing on FPGA using Verilog**
5. **License Plate Recognition on FPGA**
6. **Alarm Clock on FPGA using Verilog**
7. **Digital Clock on FPGA using VHDL**
8. **Traffic Light Controller on FPGA**
9. **Car Parking System on FPGA in Verilog**
10. **Verilog implementation of Microcontroller on FPGA**
11. **VHDL Matrix Multiplication on FPGA Xilinx**
12. **VHDL code for Microcontroller on FPGA**
13. **VHDL code for FIR Filter on FPGA**
14. **Single-Cycle MIPS processor on FPGA using Verilog**
15. **RISC Processor Design on FPGA using Verilog**
16. **PWM Generator on FPGA using VHDL**
17. **Tic Tac Toe Game on FPGA using Verilog**
18. **Pipelined MIPS Processor on FPGA in Verilog**
19. **Affordable Xilinx FPGA boards for beginners**
20. **Affordable Altera FPGA boards for beginners**
21. **Basys 3 FPGA OV7670 Camera**

DMCA PROTECTED

Privacy Policy | Disclaimer | Sitemap | Contact | Advertise Here
Copyright © 2016-2020 FPGA4student.com All Rights Reserved.